SECTION RSU
REAR SUSPENSION

CONTENTS

PRECAUTION 2

PRECAUTIONS 2
Precaution for Supplemental Restraint System (SRS) "AIR BAG" and "SEAT BELT PRE-TENSIONER" 2
Precaution for Suspension 2

PREPARATION 3

PREPARATION 3
Commercial Service Tools 3

SYMPTOM DIAGNOSIS 4

NOISE, VIBRATION AND HARSHNESS (NVH) TROUBLESHOOTING 4
NVH Troubleshooting Chart 4

PERIODIC MAINTENANCE 5

REAR SUSPENSION ASSEMBLY 5
Inspection 5

WHEEL ALIGNMENT 6
Inspection 6

REMOVAL AND INSTALLATION 8

REAR SHOCK ABSORBER 8
Exploded View 8
Removal and Installation 8
Inspection 9
Disposal 10

COIL SPRING 11
Exploded View 11
Removal and Installation 11
Inspection 12

REAR SUSPENSION BEAM 13
Exploded View 13
Removal and Installation 13
Inspection 14

SERVICE DATA AND SPECIFICATIONS (SDS) 15

SERVICE DATA AND SPECIFICATIONS (SDS) 15
Wheel Alignment (Unladen*1) 15
Wheelarch Height (Unladen*) 15

PRECAUTION

PRECAUTIONS

Precaution for Supplemental Restraint System (SRS) "AIR BAG" and "SEAT BELT PRE-TENSIONER"

INFOID:0000000009499797

The Supplemental Restraint System such as “AIR BAG” and “SEAT BELT PRE-TENSIONER”, used along with a front seat belt, helps to reduce the risk or severity of injury to the driver and front passenger for certain types of collision. Information necessary to service the system safely is included in the SR and SB section of this Service Manual.

WARNING:

- **To avoid rendering the SRS inoperative, which could increase the risk of personal injury or death in the event of a collision which would result in air bag inflation, all maintenance must be performed by an authorized NISSAN/INFINITI dealer.**
- **Improper maintenance, including incorrect removal and installation of the SRS, can lead to personal injury caused by unintentional activation of the system. For removal of Spiral Cable and Air Bag Module, see the SR section.**
- **Do not use electrical test equipment on any circuit related to the SRS unless instructed to in this Service Manual. SRS wiring harnesses can be identified by yellow and/or orange harnesses or harness connectors.**

PRECAUTIONS WHEN USING POWER TOOLS (AIR OR ELECTRIC) AND HAMMERS

WARNING:

- **When working near the Airbag Diagnosis Sensor Unit or other Airbag System sensors with the Ignition ON or engine running, DO NOT use air or electric power tools or strike near the sensor(s) with a hammer. Heavy vibration could activate the sensor(s) and deploy the air bag(s), possibly causing serious injury.**
- **When using air or electric power tools or hammers, always switch the Ignition OFF, disconnect the battery and wait at least three minutes before performing any service.**

Precaution for Suspension

INFOID:0000000008969581

- When installing rubber bushings, the final tightening must be carried out under unladen conditions with tires on ground. Spilled oil might shorten the life of rubber bushings. Be sure to wipe off any spilled oil.
- Unladen conditions mean that fuel, engine coolant and lubricant are full. Spare tire, jack, hand tools and mats are in designated positions.
- After servicing suspension parts, be sure to check wheel alignment.
- Self-lock nuts are not reusable. Always use new ones when installing. Since new self-lock nuts are pre-oiled, tighten as they are.
- The tightening surface must be kept free of oil/grease.
- When jacking up the vehicle with a floor jack, never hang the jack on the suspension beam.

PREPARATION

PREPARATION

Commercial Service Tools

INFOID:0000000009499798

Tool name	Description
Power tool 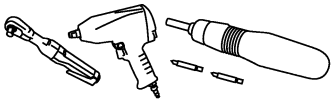 PIIB1407E	Loosening nuts, screws and bolts

SYMPTOM DIAGNOSIS

NOISE, VIBRATION AND HARSHNESS (NVH) TROUBLESHOOTING

NVH Troubleshooting Chart

INFOID:0000000009499799

Use chart below to find the cause of the symptom. If necessary, repair or replace these parts.

Reference			RSU-8, RSU-11, RSU-13	RSU-8	—	—	RSU-12	RSU-8, RSU-11, RSU-13	RSU-6	RAX-4	WT-42	WT-41	BR-7
Possible cause and SUSPECTED PARTS			Improper installation, looseness	Shock absorber deformation, damage or deflection	Bushing or mounting deterioration	Parts interference	Spring fatigue	Suspension looseness	Incorrect wheel alignment	REAR AXLE	TIRE	ROAD WHEEL	BRAKE
Symptom	REAR SUSPENSION	Noise	×	×	×	×	×	×		×	×	×	×
		Shake	×	×	×	×		×		×	×	×	×
		Vibration	×	×	×	×	×			×	×		
		Shimmy	×	×	×	×			×	×	×	×	×
		Shudder	×	×	×					×	×	×	×
		Poor quality ride or handling	×	×	×	×	×		×	×	×	×	

×: Applicable

PERIODIC MAINTENANCE

REAR SUSPENSION ASSEMBLY

Inspection

INFOID:0000000009499800

COMPONENT PART

Check the mounting conditions (looseness, backlash) of each component. Verify the component conditions (wear, damage) are normal.

SHOCK ABSORBER

Check the shock absorber for oil leaks or damage. Replace the components if necessary.

WHEEL ALIGNMENT

Inspection

INFOID:0000000009499801

DESCRIPTION

Measure the wheel alignment under unladen conditions.

NOTE:

“Unladen conditions” means that fuel, engine coolant, and lubricants are full. Spare tire, jack, hand tools and mats are in designated positions.

PRELIMINARY

Check the following:

1. Tires for improper air pressure and wear.
2. Road wheels for runout. Refer to WT-41, "Inspection".
3. Wheel bearing axial end play. Refer to RAX-10, "Wheel Bearing".
4. Shock absorber operation.
5. Each mounting part of suspension for looseness and deformation.
6. Rear suspension beam for cracks, deformation, and other damage.
7. Vehicle height (posture).

GENERAL INFORMATION AND RECOMMENDATIONS

1. A Four-Wheel Thrust Alignment should be performed.
   - This type of alignment is recommended for any NISSAN/INFINITI vehicle.
   - The four-wheel “thrust” process helps ensure that the vehicle is properly aligned and the steering wheel is centered.
   - The alignment machine itself should be capable of accepting any NISSAN/INFINITI vehicle.
   - The alignment machine should be checked to ensure that it is level.
2. Make sure the alignment machine is properly calibrated.
   - Your alignment machine should be regularly calibrated in order to give correct information.
   - Check with the manufacturer of your specific alignment machine for their recommended Service/Calibration Schedule.

THE ALIGNMENT PROCESS

IMPORTANT: Use only the alignment specifications listed in this Service Manual. Refer to RSU-15, "Wheel Alignment (Unladen*1)".

1. When displaying the alignment settings, many alignment machines use “indicators”: (Green/red, plus or minus, Go/No Go). **Do NOT use these indicators.**
   - The alignment specifications programmed into your alignment machine that operate these indicators may not be correct.
   - This may result in an ERROR.
2. Most camera-type alignment machines are equipped with both "Rolling Compensation" method and optional "Jacking Compensation" method to "compensate" the alignment targets or head units.
   "Rolling Compensation" is the preferred method.
   - If using the "Rolling Compensation" method, after installing the alignment targets or head units, push or pull on the rear wheel to move the vehicle. Do not push or pull the vehicle body.
   - If using the "Jacking Compensation" method, after installing the alignment targets or head units, raise the vehicle and rotate the wheels 1/2 turn both ways.

NOTE:

Do not use the "rolling compensation" if you are using sensor-type alignment equipment.

- Follow all instructions for the alignment machine you're using for more information.

CAMBER INSPECTION

- Measure camber of both right and left wheels with a suitable alignment gauge.

Camber : **Refer to RSU-15, "Wheel Alignment (Unladen*1)".**

- If it is out of the specification value, inspect and replace any damaged or worn rear suspension parts.

TOTAL TOE-IN INSPECTION

Measure the total toe-in using following procedure. If it is out of the specification, inspect and replace any damaged or worn rear suspension parts.

WARNING:

- **Always perform the following procedure on a flat surface.**
- **Make sure that no person is in front of the vehicle before pushing it.**

1. Bounce the rear of the vehicle up and down to stabilize the vehicle height (posture).
2. Push the rear wheel to move the vehicle straight ahead about 5 m (16 ft).
3. Put a mark on the base line of the tread (rear side) of both tires at the same height of hub center. These are measuring points.

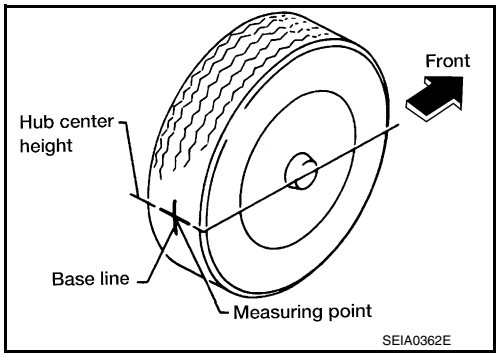

4. Measure the distance (A) from the rear side.
5. Push the rear wheel to move the vehicle slowly ahead and to rotate the wheels 180 degrees (1/2 turn).
   CAUTION:
   If the wheels have rotated more than 180 degrees (1/2 turn), try the above procedure again from the beginning. Do not push the vehicle backward.
6. Measure the distance (B) from the front side.

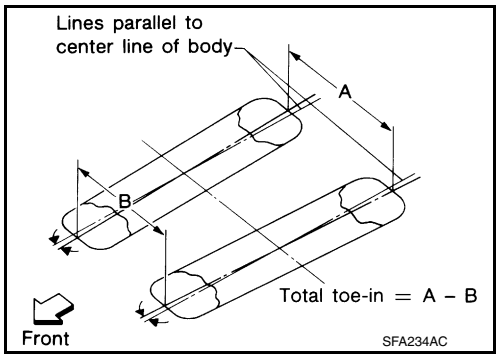

Total toe-in : **Refer to RSU-15, "Wheel Alignment (Unladen*1)".**

REMOVAL AND INSTALLATION

REAR SHOCK ABSORBER

Exploded View

INFOID:0000000009499802

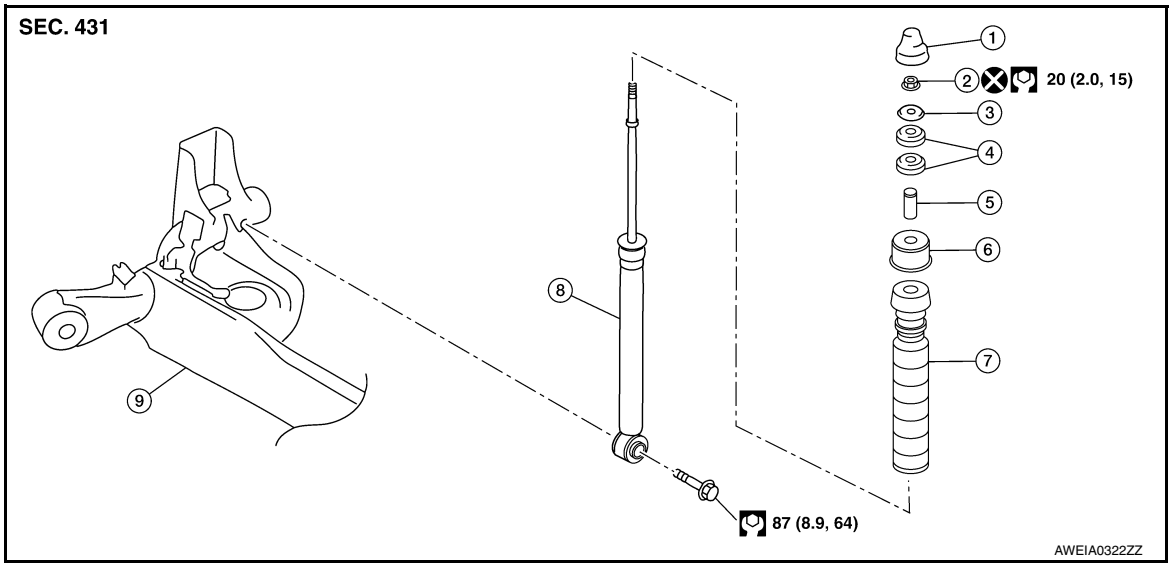

1. Cap	2. Piston rod lock nut	3. Washer
4. Bushing	5. Distance tube	6. Bound bumper cover
7. Bound bumper	8. Shock absorber	9. Rear suspension beam

Removal and Installation

INFOID:0000000009499803

REMOVAL

1. Remove the rear shock absorber mask. Refer to INT-33, "Exploded View".
2. Remove the cap from the rear shock absorber.
3. Remove the piston rod lock nut (1).
   NOTE:
   To loosen the piston rod lock nut, hold the tip (A) of the piston rod.
4. Remove the washer and the bushing.

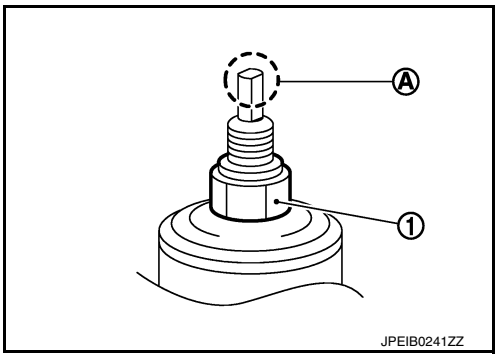

5. Set a suitable jack under the rear suspension beam.
   CAUTION:
   - **At this step, the jack must be set only for supporting the removal procedure. For details on jacking up the vehicle, refer to GI-28, "Garage Jack and Safety Stand".**
   - **Do not damage the rear suspension beam with the jack.**
   - **Make sure the rear suspension beam is stable when using the jack.**
6. Remove the lower shock absorber bolt.
7. Remove the rear shock absorber.
8. Remove the bushing, the distance tube, the washer, the bound bumper cover, and the bound bumper from the shock absorber.
9. Inspect the components. Refer to RSU-9, "Inspection".

INSTALLATION

Installation is in the reverse order of removal.

- To install the bushings (1), securely insert the protrusion (A) into the hole in the vehicle body.

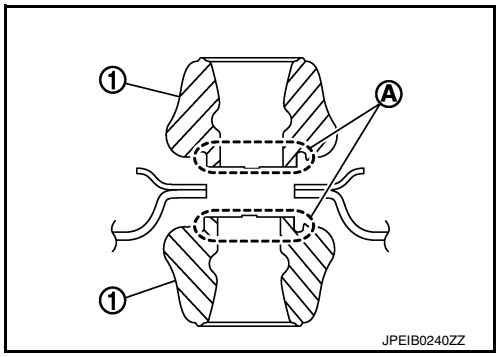

- Install the washer (1) in the direction shown.

⇦ : Bushing side

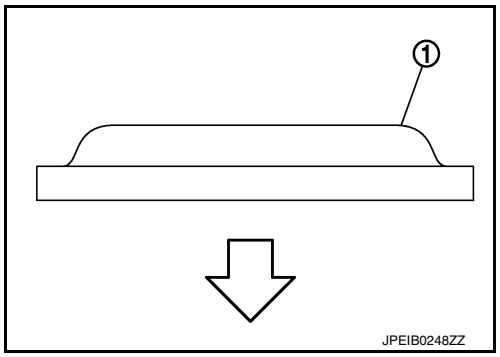

- Perform the final tightening of the bolts and nuts under unladen conditions with the tires on level ground.
- Hold the tip (A) of the piston rod. Tighten the piston rod lock nut (1) to the specification.

CAUTION:
Do not reuse the piston rod lock nut.

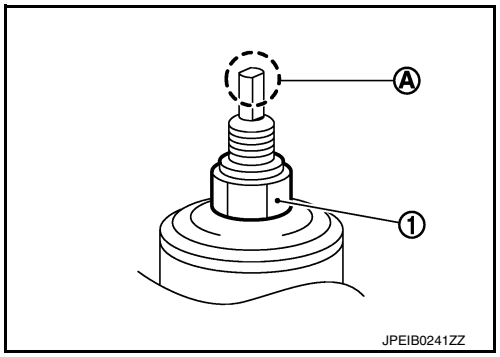

- When installing the cap, securely engage the cap groove (A) with the flange on the vehicle body.

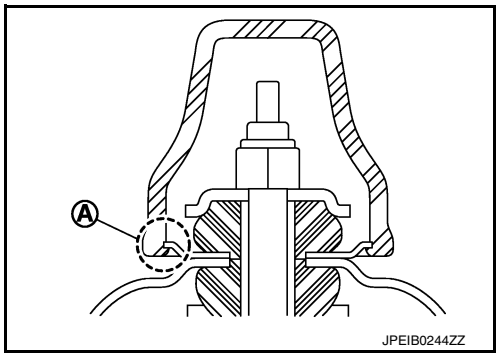

- After replacing the shock absorber, always follow the disposal procedure to discard the old shock absorber. Refer to RSU-10, "Disposal".

Inspection

INFOID:0000000009499804

INSPECTION AFTER REMOVAL

Shock Absorber

Check the following items and replace the parts if necessary.

- Check the shock absorber for oil leaks, deformation, cracks, and other damage.
- Check the piston rod for damage, uneven wear, and distortion.

Bound Bumper, Bushing

Check for cracks and damage. Replace the parts if necessary.

Washer, Bound Bumper Cover, Distance Tube

- Check for cracks and damage. Replace the parts if necessary.

Disposal

INFOID:0000000009499805

1. Set the shock absorber horizontally with the piston rod fully extended.
2. Drill a 2 – 3 mm (0.08 – 0.12 in) hole at the position (●) from the top as shown to release gas gradually.
   CAUTION:
   - **Wear eye protection (safety glasses).**
   - **Wear gloves.**
   - **Be careful with metal chips or oil blown out by the compressed gas.**

   NOTE:
   - Drill vertically in this direction (⬅).
   - Drill directly to the outer tube avoiding brackets.
   - The gas is clear, colorless, odorless, and harmless.

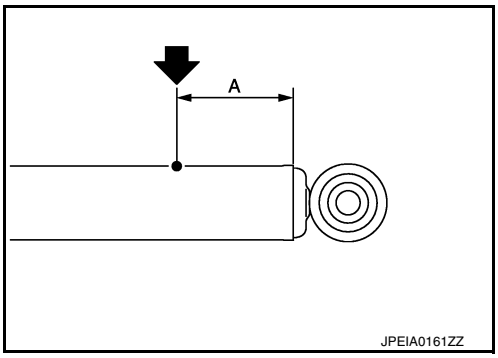

(A) : 20 – 30 mm (0.79 – 1.18 in)

3. Position the drilled hole downward and drain oil by moving the piston rod several times.
   CAUTION:
   Dispose of drained oil according to the law and local regulations.

COIL SPRING

Exploded View

INFOID:0000000009499806

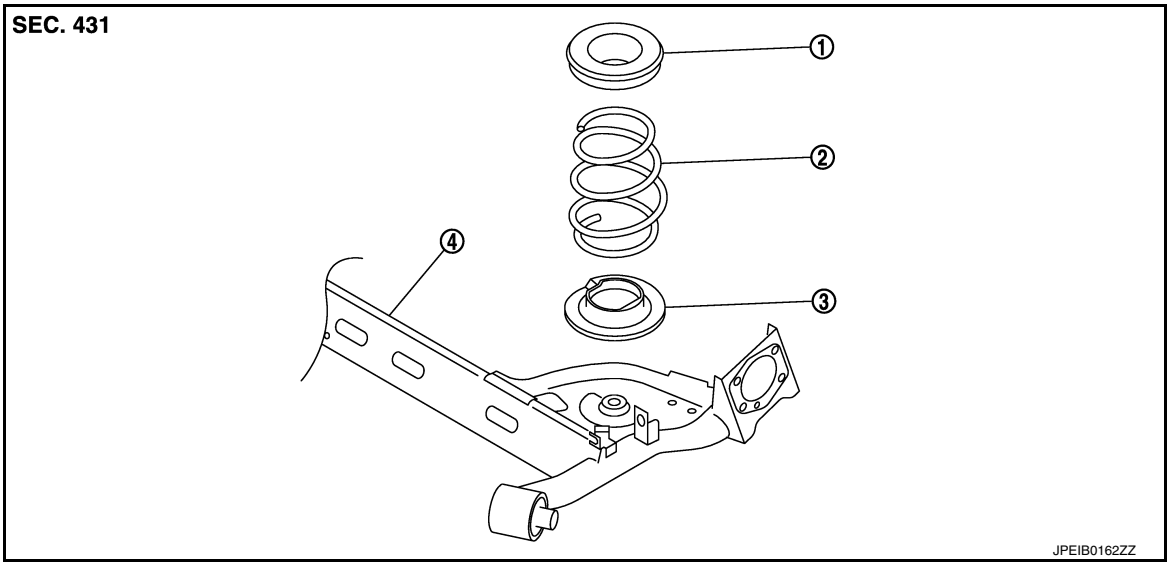

1. Upper rubber seat
2. Coil spring
3. Lower rubber seat
4. Rear suspension beam

Removal and Installation

INFOID:0000000009499807

REMOVAL

1. Set a suitable jack under the rear suspension beam.
   CAUTION:
   - **At this step, the jack must be set only for supporting the removal procedure. For details on jacking up the vehicle, refer to GI-28, "Garage Jack and Safety Stand".**
   - **Do not damage the rear suspension beam with the jack.**
2. Remove the lower shock absorber bolts. Refer to RSU-8, "Exploded View".
3. Slowly lower the suitable jack. Remove the upper rubber seat, the coil spring, and the lower rubber seat from the rear suspension beam.
   CAUTION:
   Make sure the rear suspension beam is stable when using the jack.
4. Inspect the components. Refer to RSU-12, "Inspection".

INSTALLATION

Installation is in the reverse order of removal.

- Identify the upper side of the coil spring.

⇦ : Upper side

NOTE:
The top of the coil spring has a flat shape.

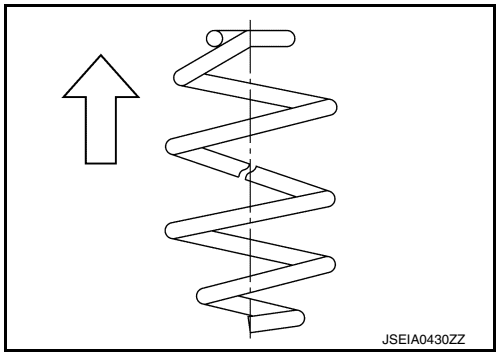

- Install the lower rubber seat (A) to the rear suspension beam mounting hole (B).
- Match up lower rubber seat indentions and rear suspension beam grooves and attach.

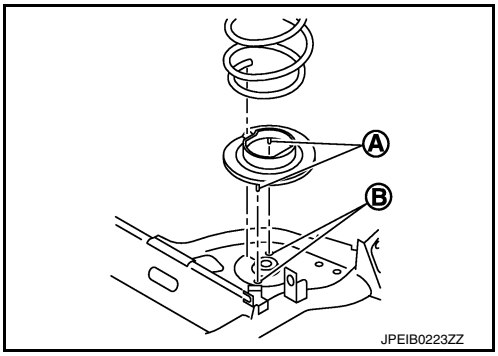

Inspection

INFOID:0000000009499808

INSPECTION AFTER REMOVAL

Check the upper rubber seat, the lower rubber seat, and the coil spring for deformation, cracks, and damage. Replace the parts if necessary.

REAR SUSPENSION BEAM

Exploded View

INFOID:0000000009499809

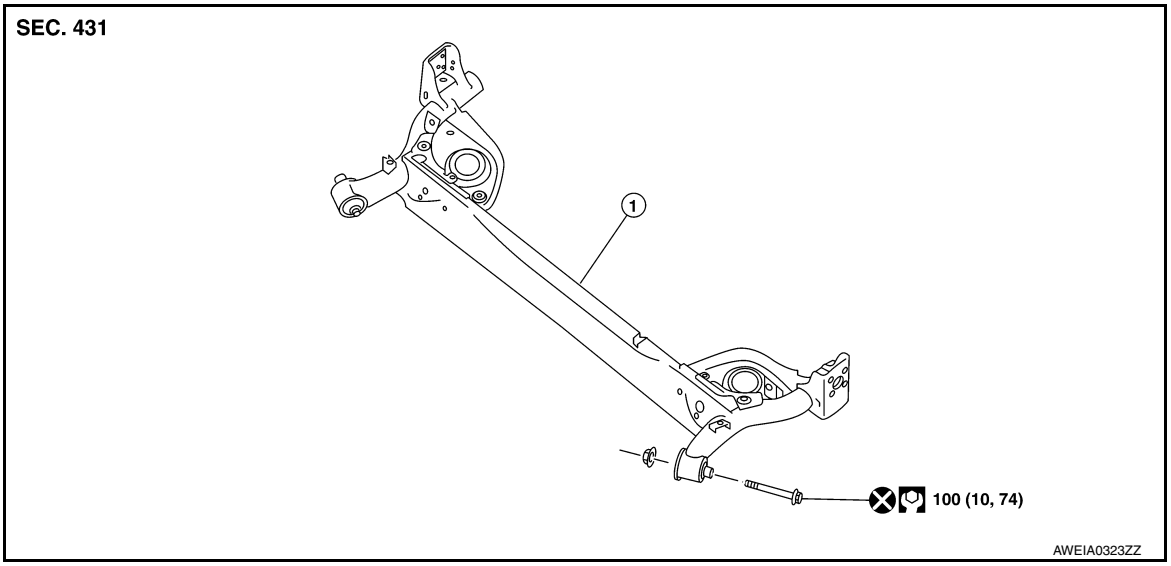

1. Rear suspension beam

Removal and Installation

INFOID:0000000009499810

NOTE:
When removing components such as hoses, tubes, lines, etc., cap or plug openings to prevent fluid from spilling.

REMOVAL

1. Remove the rear wheels and tires using power tools. Refer to WT-45, "Removal and Installation".
2. Disconnect the brake hoses from the rear suspension beam.
3. Remove the spindles and rear drum brake components. Refer to RAX-6, "Exploded View".
4. Remove the wheel sensors and position the wheel sensor harnesses aside. Refer to BRC-106, "REAR WHEEL SENSOR : Removal and Installation".
5. Disconnect the parking brake cables from the rear suspension beam and position the rear drum brake back plates aside with wire. Refer to RAX-6, "Exploded View".
6. Set a suitable jack under the rear suspension beam.
   CAUTION:
   - **At this step, the jack must be set only for supporting the removal procedure. For details on jacking up the vehicle, refer to GI-28, "Garage Jack and Safety Stand".**
   - **Do not damage the rear suspension beam with the jack.**
7. Remove the lower shock absorber bolts. Refer to RSU-8, "Exploded View".
8. Slowly lower the suitable jack. Remove the upper rubber seats, the coil springs, and the lower rubber seats from the rear suspension beam.
   CAUTION:
   Make sure the rear suspension beam is stable when using the jack.
9. Remove the rear suspension beam bolts.
10. Slowly lower the suitable jack. Remove the rear suspension beam from the vehicle.
11. Inspect the components. Refer to RSU-14, "Inspection".

INSTALLATION

Installation is in the reverse order of removal.
CAUTION:
Do not reuse the rear suspension beam nuts.

- Perform the final tightening of the rear suspension beam nuts and bolts under unladen conditions with the tires on level ground.
- Adjust the parking brake. Refer to PB-4, "Inspection and Adjustment".
- Fill the hydraulic brake system. Refer to BR-11, "Refilling".
- Bleed the hydraulic brake system. Refer to BR-12, "Bleeding Brake System".
- Complete the inspection. Refer to BR-11, "Inspection".

Inspection

INFOID:0000000009499811

INSPECTION AFTER REMOVAL

Check the rear suspension beam for deformation, cracks or damage. Replace the parts if necessary.

INSPECTION AFTER INSTALLATION

1. Check the wheel sensor harness to be sure the connectors are fully seated.
2. Check the neutral position of the steering angle sensor. Refer to BRC-53, "Work Procedure".
3. Check the wheel alignment. Refer to RSU-6, "Inspection".

SERVICE DATA AND SPECIFICATIONS (SDS)

SERVICE DATA AND SPECIFICATIONS (SDS)

Wheel Alignment (Unladen*1)

INFOID:0000000009499812

Camber Degree minute (Decimal degree)	Minimum	–1° 55′ (–1.92°)
	Nominal	–1° 25′ (–1.42°)
	Maximum	–0° 55′ (–0.92°)

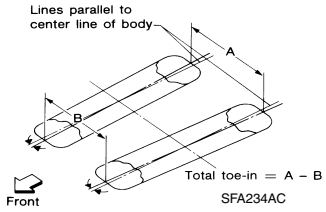

Total toe-in	Distance (A - B)	Minimum	Out 2.0 mm (Out 0.079 in)
		Nominal	In 2.0 mm (In 0.079 in)
		Maximum	In 6.0 mm (In 0.236 in)
	Angle (LH and RH)*2 Degree minute (Decimal degree)	Minimum	Out 0° 45′ (Out 0.75°)
		Nominal	In 0° 10′ (In 0.17°)
		Maximum	In 0° 35′ (In 0.58°)

*1: Fuel, engine coolant, and lubricants are full. Spare tire, jack, hand tools, and mats are in designated positions.

*2: Since an adjustment mechanism is not included, the value of the left and right wheels must be used as the standard value.

Wheelarch Height (Unladen*)

INFOID:0000000009499813

Unit: mm (in)

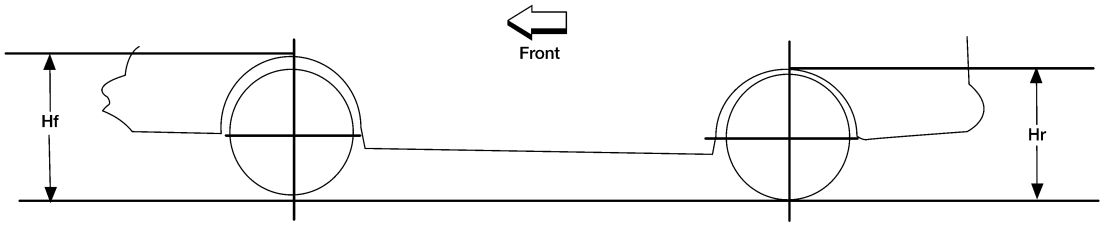

LEIA0085E

Tire size	185/65R15	195/55R16
Front (Hf)	690 (27.17)	687 (27.05)
Rear (Hr)	679 (26.73)	678 (26.69)

*: Fuel, engine coolant, and lubricants are full. Spare tire, jack, hand tools, and mats are in designated positions.